Cambridge International AS & A Level

Cambridge International Examinations
Cambridge International Advanced Subsidiary and Advanced Level

CANDIDATE NAME									
CENTRE NUMBER						CANDIDATE NUMBER			

0800233391

PHYSICS **9702/22**

Paper 2 AS Level Structured Questions **February/March 2018**

1 hour 15 minutes

Candidates answer on the Question Paper.

No Additional Materials are required.

READ THESE INSTRUCTIONS FIRST

Write your Centre number, candidate number and name on all the work you hand in.
Write in dark blue or black pen.
You may use an HB pencil for any diagrams or graphs.
Do not use staples, paper clips, glue or correction fluid.
DO **NOT** WRITE IN ANY BARCODES.

Answer **all** questions.

Electronic calculators may be used.
You may lose marks if you do not show your working or if you do not use appropriate units.

At the end of the examination, fasten all your work securely together.
The number of marks is given in brackets [ ] at the end of each question or part question.

This document consists of **14** printed pages and **2** blank pages.

© UCLES 2018

CAMBRIDGE International Examinations

Data

speed of light in free space	$c = 3.00 \times 10^{8}\,\text{m s}^{-1}$
permeability of free space	$\mu_0 = 4\pi \times 10^{-7}\,\text{H m}^{-1}$
permittivity of free space	$\varepsilon_0 = 8.85 \times 10^{-12}\,\text{F m}^{-1}$
	$(\frac{1}{4\pi\varepsilon_0} = 8.99 \times 10^{9}\,\text{m F}^{-1})$
elementary charge	$e = 1.60 \times 10^{-19}\,\text{C}$
the Planck constant	$h = 6.63 \times 10^{-34}\,\text{J s}$
unified atomic mass unit	$1\,\text{u} = 1.66 \times 10^{-27}\,\text{kg}$
rest mass of electron	$m_e = 9.11 \times 10^{-31}\,\text{kg}$
rest mass of proton	$m_p = 1.67 \times 10^{-27}\,\text{kg}$
molar gas constant	$R = 8.31\,\text{J K}^{-1}\,\text{mol}^{-1}$
the Avogadro constant	$N_A = 6.02 \times 10^{23}\,\text{mol}^{-1}$
the Boltzmann constant	$k = 1.38 \times 10^{-23}\,\text{J K}^{-1}$
gravitational constant	$G = 6.67 \times 10^{-11}\,\text{N m}^2\,\text{kg}^{-2}$
acceleration of free fall	$g = 9.81\,\text{m s}^{-2}$

© UCLES 2018

Formulae

uniformly accelerated motion	$s = ut + \frac{1}{2}at^2$ $v^2 = u^2 + 2as$
work done on/by a gas	$W = p\Delta V$
gravitational potential	$\phi = -\frac{Gm}{r}$
hydrostatic pressure	$p = \rho gh$
pressure of an ideal gas	$p = \frac{1}{3}\frac{Nm}{V}\langle c^2 \rangle$
simple harmonic motion	$a = -\omega^2 x$
velocity of particle in s.h.m.	$v = v_0 \cos \omega t$ $v = \pm \omega \sqrt{(x_0^2 - x^2)}$
Doppler effect	$f_o = \frac{f_s v}{v \pm v_s}$
electric potential	$V = \frac{Q}{4\pi\varepsilon_0 r}$
capacitors in series	$1/C = 1/C_1 + 1/C_2 + \ldots$
capacitors in parallel	$C = C_1 + C_2 + \ldots$
energy of charged capacitor	$W = \frac{1}{2}QV$
electric current	$I = Anvq$
resistors in series	$R = R_1 + R_2 + \ldots$
resistors in parallel	$1/R = 1/R_1 + 1/R_2 + \ldots$
Hall voltage	$V_H = \frac{BI}{ntq}$
alternating current/voltage	$x = x_0 \sin \omega t$
radioactive decay	$x = x_0 \exp(-\lambda t)$
decay constant	$\lambda = \frac{0.693}{t_{\frac{1}{2}}}$

© UCLES 2018

[Turn over

Answer **all** the questions in the spaces provided.

1 **(a)** Complete Fig. 1.1 to indicate whether each of the quantities is a vector or a scalar.

quantity	vector or scalar
acceleration	
speed	
power	

Fig. 1.1

[2]

(b) A ball is projected with a horizontal velocity of $1.1\,m\,s^{-1}$ from point A at the edge of a table, as shown in Fig. 1.2.

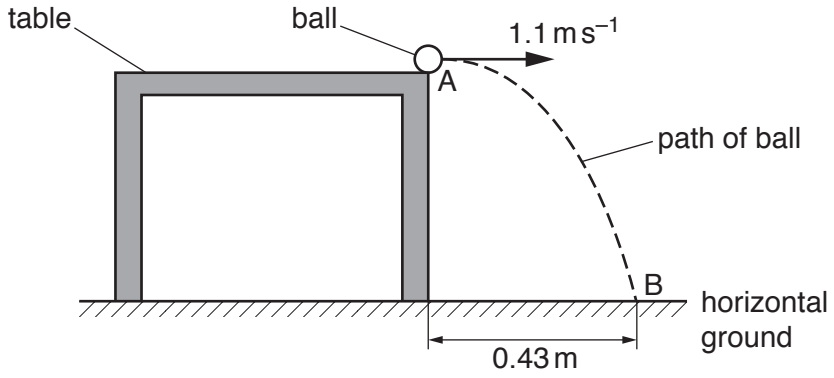

Fig. 1.2

The ball lands on horizontal ground at point B which is a distance of 0.43 m from the base of the table. Air resistance is negligible.

(i) Calculate the time taken for the ball to fall from A to B.

time = ... s [1]

(ii) Use your answer in **(b)(i)** to determine the height of the table.

height = ... m [2]

© UCLES 2018

(iii) The ball leaves the table at time $t = 0$.

For the motion of the ball between A and B, sketch graphs on Fig. 1.3 to show the variation with time t of

1. the acceleration a of the ball,

2. the vertical component s_v of the displacement of the ball from A.

Numerical values are not required.

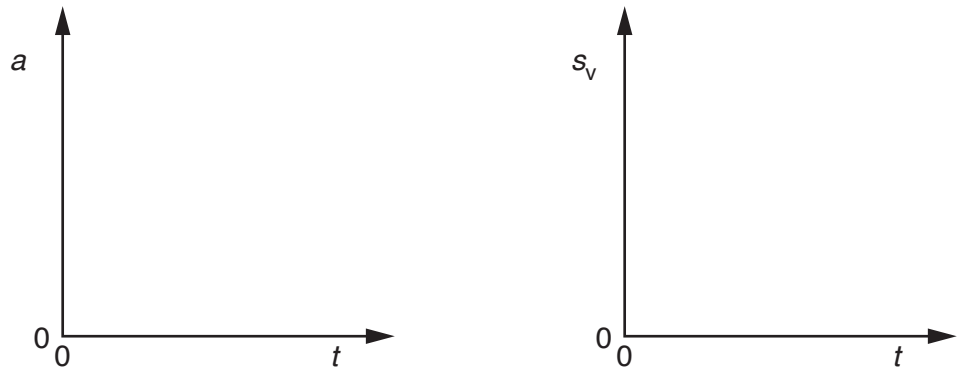

Fig. 1.3

[2]

(c) A ball of greater mass is projected from the table with the same velocity as the ball in **(b)**. Air resistance is still negligible.

State and explain the effect, if any, of the increased mass on the time taken for the ball to fall to the ground.

.....

.....[1]

[Total: 8]

© UCLES 2018

2 **(a)** Explain what is meant by

(i) *work done*,

.....

.....[1]

(ii) *kinetic energy*.

.....

.....[1]

(b) A leisure-park ride consists of a carriage that moves along a railed track. Part of the track lies in a vertical plane and follows an arc XY of a circle of radius 13 m, as shown in Fig. 2.1.

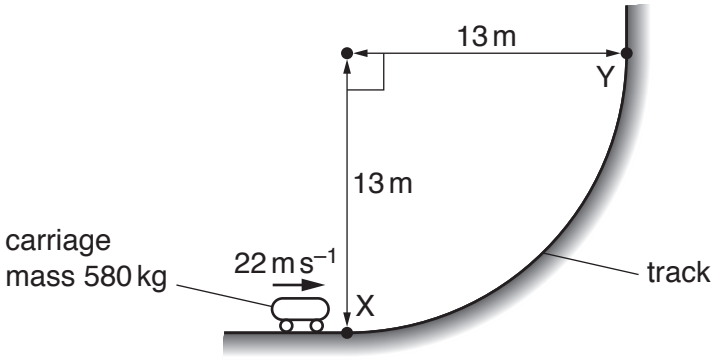

Fig. 2.1

The mass of the carriage is 580 kg. At point X, the carriage has velocity 22 m s^{-1} in a horizontal direction. The velocity of the carriage then decreases to 12 m s^{-1} in a vertical direction at point Y.

(i) For the carriage moving from X to Y

1. show that the decrease in kinetic energy is 9.9×10^4 J,

[2]

2. calculate the gain in gravitational potential energy.

gain in gravitational potential energy = ... J [2]

© UCLES 2018

(ii) Show that the length of the track from X to Y is 20 m.

[1]

(iii) Use your answers in **(b)(i)** and **(b)(ii)** to calculate the average resistive force acting on the carriage as it moves from X to Y.

resistive force = ... N [2]

(iv) Describe the change in the direction of the linear momentum of the carriage as it moves from X to Y.

.....

.....[1]

(v) Determine the magnitude of the change in linear momentum when the carriage moves from X to Y.

change in momentum = ... N s [3]

[Total: 13]

3 **(a)** For the deformation of a wire under tension, define

(i) *stress*,

.....

.....[1]

(ii) *strain*.

.....

.....[1]

(b) A wire is fixed at one end so that it hangs vertically. The wire is given an extension x by suspending a load F from its free end. The variation of F with x is shown in Fig. 3.1.

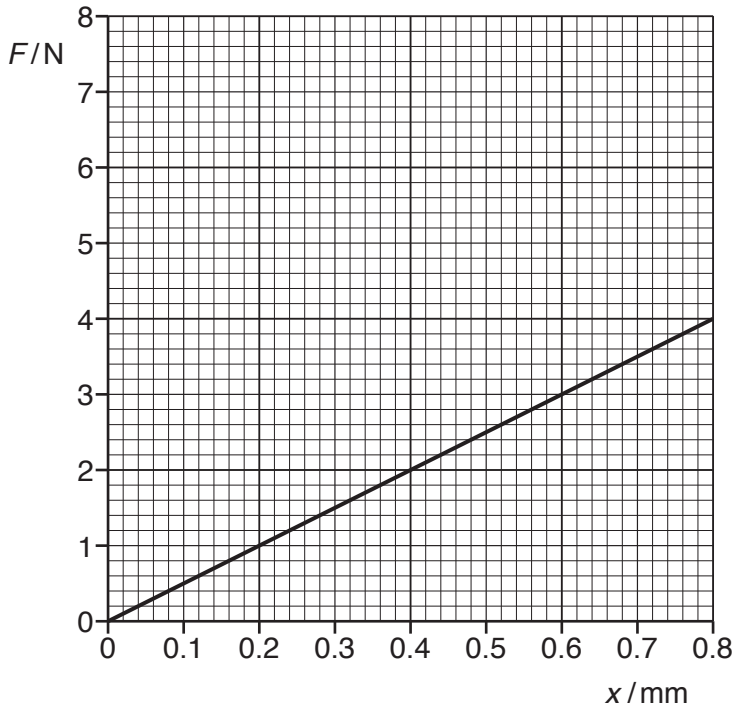

Fig. 3.1

The wire has cross-sectional area $9.4 \times 10^{-8}\,m^2$ and original length 2.5 m.

(i) Describe how measurements can be taken to determine accurately the cross-sectional area of the wire.

.....

.....

.....

.....

.....[3]

© UCLES 2018

(ii) Determine the Young modulus E of the material of the wire.

E = ... Pa [2]

(iii) **Use Fig. 3.1** to calculate the increase in the energy stored in the wire when the load is increased from 2.0 N to 4.0 N.

increase in energy = ... J [2]

(c) The wire in **(b)** is replaced by a new wire of the same material. The new wire has twice the length and twice the diameter of the old wire. The new wire also obeys Hooke's law.

On Fig. 3.1, sketch the variation with extension x of the load F for the new wire from $x = 0$ to $x = 0.80$ mm. [2]

[Total: 11]

4 **(a)** State the conditions required for the formation of a stationary wave.

.....

.....

.....

.....[2]

(b) The sound from a loudspeaker is detected by a microphone that is connected to a cathode-ray oscilloscope (c.r.o.). Fig. 4.1 shows the trace on the screen of the c.r.o.

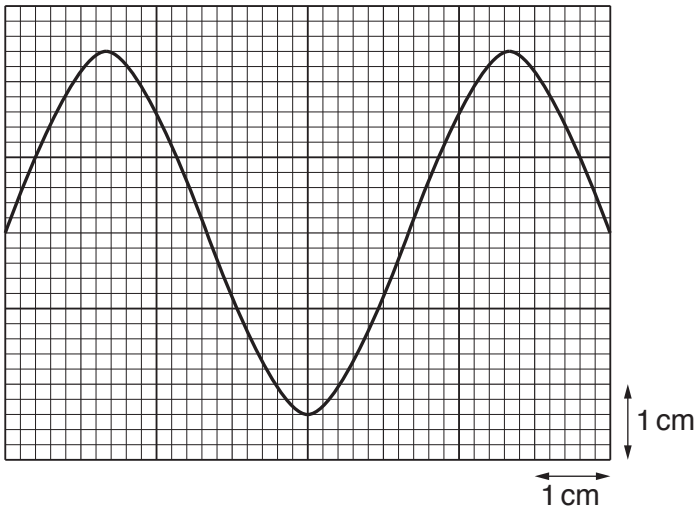

Fig. 4.1

In air, the sound wave has a speed of 330 m s^{-1} and a wavelength of 0.18 m.

(i) Calculate the frequency of the sound wave.

frequency = ... Hz [2]

(ii) Determine the time-base setting, in s cm^{-1}, of the c.r.o.

time-base setting = ... s cm^{-1} [2]

© UCLES 2018

(iii) The intensity of the sound from the loudspeaker is now halved. The wavelength of the sound is unchanged. Assume that the amplitude of the trace is proportional to the amplitude of the sound wave.

On Fig. 4.1, sketch the new trace shown on the screen of the c.r.o. [2]

(c) The loudspeaker in **(b)** is held above a vertical tube of liquid, as shown in Fig. 4.2.

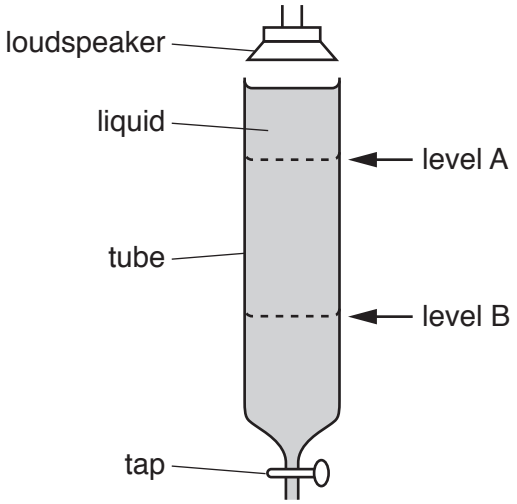

Fig. 4.2

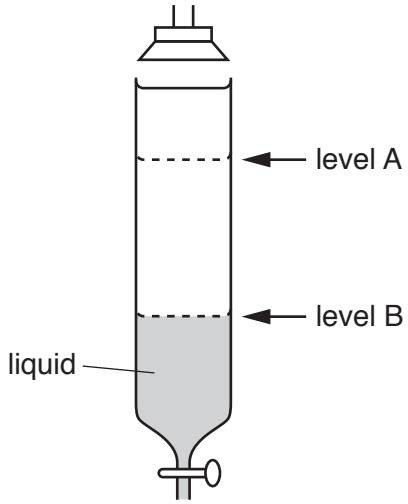

Fig. 4.3

A tap at the bottom of the tube is opened so that liquid drains out at a constant rate. The wavelength of the sound from the loudspeaker is 0.18 m. The sound that is heard first becomes much louder when the liquid surface reaches level A. The next time that the sound becomes much louder is when the liquid surface reaches level B, as shown in Fig. 4.3.

(i) Calculate the vertical distance between level A and level B.

distance = ... m [1]

(ii) **On Fig. 4.3**, label with the letter N the positions of the nodes of the stationary wave that is formed in the air column when the liquid surface is at level B. [1]

(iii) The mass of liquid leaving the tube per unit time is $6.7\,g\,s^{-1}$. The tube has an internal cross-sectional area of $13\,cm^2$. The density of the liquid is $0.79\,g\,cm^{-3}$.

Calculate the time taken for the liquid to move from level A to level B.

time = ... s [2]

[Total: 12]

© UCLES 2018

[Turn over

5 **(a)** State Kirchhoff's second law.

.....

.....[2]

(b) Two batteries, each of electromotive force (e.m.f.) 6.0 V and negligible internal resistance, are connected in series with three resistors, as shown in Fig. 5.1.

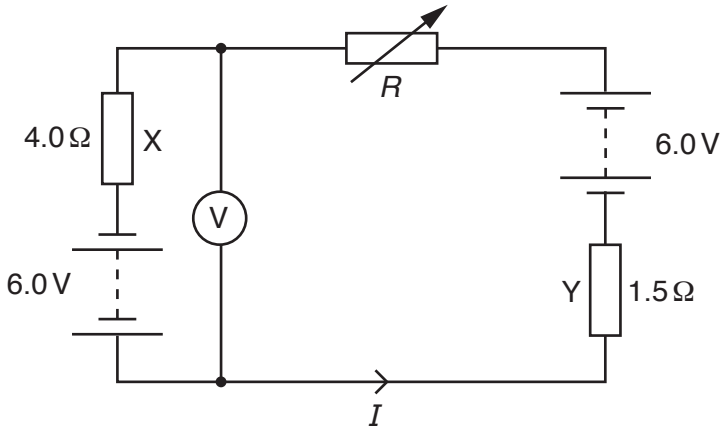

Fig. 5.1

Resistor X has resistance 4.0 Ω and resistor Y has resistance 1.5 Ω.

(i) The resistance *R* of the variable resistor is changed until the voltmeter in the circuit reads zero.

Calculate

1. the current *I* in the circuit,

I = ... A [1]

2. the resistance *R*.

R = ... Ω [2]

© UCLES 2018

(ii) Resistors X and Y are wires made from the same material. The diameter of the wire of X is twice the diameter of the wire of Y.

Determine the ratio

$$\frac{\text{average drift speed of free electrons in X}}{\text{average drift speed of free electrons in Y}}.$$

ratio = ... [2]

(iii) The resistance R of the variable resistor is now increased.

State and explain the effect of the increase in R on the power transformed by each of the batteries.

.....

.....

.....

.....[3]

[Total: 10]

6 A sample of a radioactive isotope emits a beam of β^- radiation.

(a) State the change, if any, to the number of neutrons in a nucleus of the sample that emits a β^- particle.

.....[1]

(b) The number of β^- particles passing a fixed point in the beam in a time of 2.0 minutes is 9.8×10^{10}.

Calculate the current, in pA, produced by the beam of β^- particles.

current = ... pA [3]

(c) Suggest why the β^- particles are emitted with a range of kinetic energies.

.....

.....

.....

.....[2]

[Total: 6]

© UCLES 2018

BLANK PAGE

© UCLES 2018

BLANK PAGE

Permission to reproduce items where third-party owned material protected by copyright is included has been sought and cleared where possible. Every reasonable effort has been made by the publisher (UCLES) to trace copyright holders, but if any items requiring clearance have unwittingly been included, the publisher will be pleased to make amends at the earliest possible opportunity.

To avoid the issue of disclosure of answer-related information to candidates, all copyright acknowledgements are reproduced online in the Cambridge International Examinations Copyright Acknowledgements Booklet. This is produced for each series of examinations and is freely available to download at www.cie.org.uk after the live examination series.

Cambridge International Examinations is part of the Cambridge Assessment Group. Cambridge Assessment is the brand name of University of Cambridge Local Examinations Syndicate (UCLES), which is itself a department of the University of Cambridge.

© UCLES 2018